This drawing is property of Cox Geelen and may not be copied in whole or in part without the prior written consent of the owner

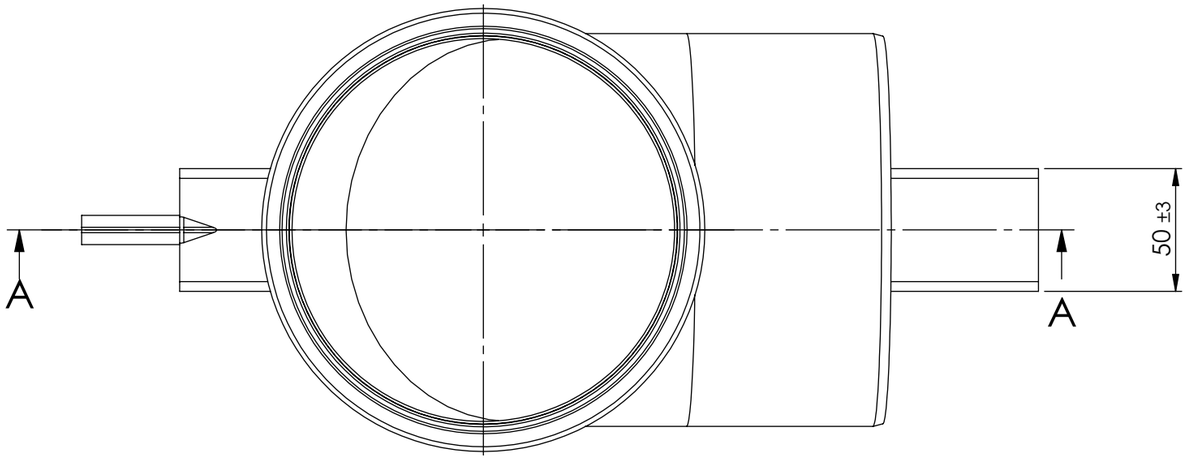

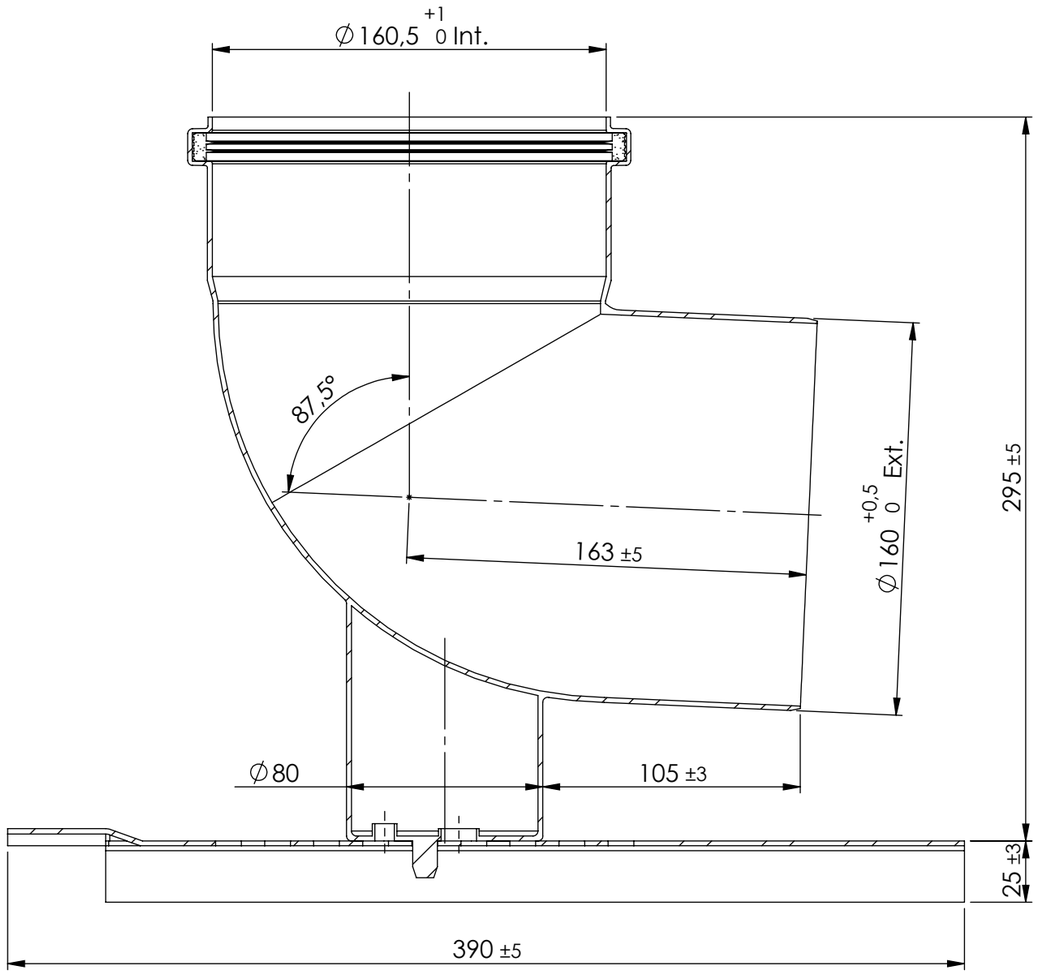

SECTION A-A

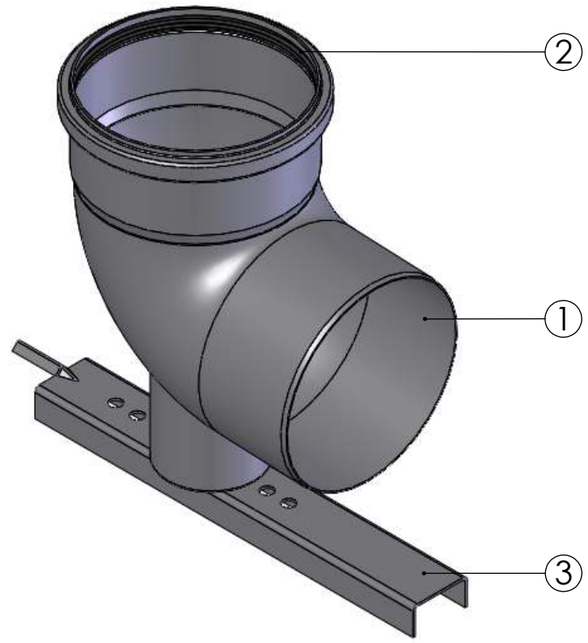

Pos.	QTY.	Description	Material	Drawing	Part nr
3	1	Shaft bend support	DX52D+Z275-NA	06492	115629
2	1	Seal	EPDM	L0295	891378
1	1	Shaft Bend ø110 - 90°	PPs	-	-

Revisions				
00	Production drawing	09013	11-11-2009	RoHo

Unit of measure:	mm	Name:	R.Houwen	Date:	11-11-2009	Material:	-
Scale:	1:2.5	Checked:	L.Goessen	Date:	11-11-2009	Mass[g]:	913.74

Title: Shaftbend with support

Comments:

Cox Geelen
Emmastraat 92
6245 HZ Eijsden Nederland
T: +31(0)43-4099500
F: +31(0)43-4091987

Tolerances:
ø = ± 0.5
L = ± 3
∠ = ± 3°

Projection:

Part.no: -

Dwg. no. : **A1116 P 00** A3